USN. | | | | | | | | | | [22MTASDDE312]

THIRD SEMESTER M.Tech EXAMINATION, DECEMBER-2024

FATIGUE AND FRACTURE MECHANICS

Time: 3 Hours **Maximum Marks: 100**

Instructions:
i. Answer **FIVE** full Questions. Question number 1 and 2 are compulsory. Each question carries 20 marks.
ii. Missing data may be suitably assumed.

			CO	BL	M
1.	**a.**	**i.** Explain the different modes of failure. **ii.** Describe the conventional and modern design concept	**CO1** **CO1**	**L1** **L1**	**05** **05**
	b.	Describe the concepts of load control and displacement control methods.	**CO1**	**L2**	**10**
2.	**a.**	Explain void growth and coalescence of microvoids with neat diagrams.	**CO2**	**L2**	**10**
	b.	A through the thickness crack of length 2a has been found in a large plate. The plate is subjected to a bending moment of M_o/unit length. Determine at which value of moment M_{omax} the crack growth will occur and the corresponding stress value. a=0.02m, t=0.003m, σ_y=1300MPa, K_{1C}=110MN/m$^{3/2}$. 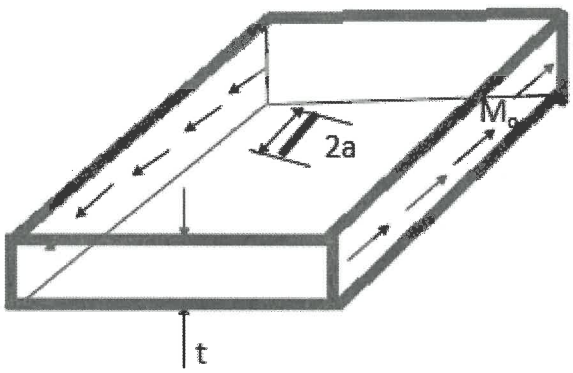 	**CO2**	**L3**	**10**
3.	**a.**	Show that the non-linear elastic energy release rate J-integral of a closed contour is path independent.	**CO3**	**L2**	**10**
	b.	A single edge notch bend cracked specimen is loaded in a 3-point bend fixture and variation of centre load with CMOD is recorded. The span of the bend fixture is s=200mm for the specimen of width W=50mm, thickness B=25mm and crack length a=25mm. P-CMOD record of the test shown in figure. Use the table given below to find f(a/w). Determine CTODc following British Standard BS 5762 if E=207GPa, v=0.29 and σys=600MPa.	**CO3**	**L3**	**10**

JAIN (Deemed-to-be University) Learning Resource Centre Jain Global Campus Ram 112

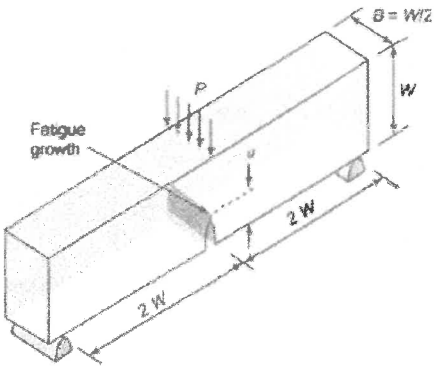

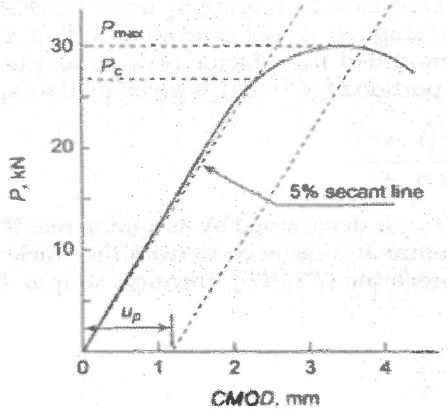

a/W	f (a/W) SENB	CT	DCT
0.450	2.286	8.340	8.70
0.455	2.320	8.458	8.83
0.460	2.354	8.580	8.97
0.465	2.390	8.704	9.11
0.470	2.426	8.830	9.25
0.475	2.463	8.960	9.39
0.480	2.501	9.093	9.54
0.485	2.540	9.230	9.69
0.490	2.580	9.369	9.85
0.495	2.621	9.512	10.0
0.500	2.663	9.659	10.1
0.505	2.705	9.807	10.3
0.510	2.749	9.964	10.5
0.515	2.794	10.12	10.6
0.520	2.840	10.29	10.8
0.525	2.887	10.45	11.0
0.530	2.936	10.63	11.2
0.535	2.985	10.82	11.4
0.540	3.036	10.93	11.6
0.545	3.089	11.17	11.8
0.550	3.142	11.36	12.0

OR

4.	**a.**	Derive an expression for J-Contour Integral for a nonlinear elastic material under quasi static conditions.	**CO3**	**L2**	**10**
	b.	A steel plate having σ_{ys}=350Mpa of width 80mm and t=5mm has a centre crack 2a=40mm length. If the far field stress is 150 MPa, determine the effective stress intensity factor and the length of the effective crack using Irwin's correction.	**CO3**	**L3**	**10**
5.	**a.**	Explain the procedure of life estimation using S-N approach using a flowchart.	**CO4**	**L2**	**10**

	b.	Write the classification of fatigue loads.	**CO4**	**L2**	**10**
		OR			
6.	**a.**	Define mean stress, stress range, K_{max}, K_{min}, stress intensity factor range, stress ratio, stress amplitude, amplitude ratio	**CO4**	**L2**	**08**
	b.	Explain rain flow cycle counting method	**CO5**	**L2**	**04**
	c.	Explain the effect of an overload and underload in a constant amplitude load history.	**CO4**	**L2**	**08**
7.	**a.**	When NDT methods are used.	**CO6**	**L1**	**10**
	b.	Write short notes on i)Dye-penetrant inspection ii)Magnaflux inspection.	**CO6**	**L2**	**05** **05**
		OR			
8.	**a.**	Write short notes on i)Ultrasonic testing. ii)Eddy current method.	**CO6**	**L2**	**05** **05**
	b.	Write short notes on i)Radiological inspection. ii)Visual inspection.	**CO6**	**L2**	**05** **05**